Leaf Disease Detection Using Raspberry Pi

LAYA YESUDAS [1], SANTHIYA.S [2], PARIMALA.R [3], MOHAMMAD HARRIS S[4]
[1, 2, 3] *Dept. of ECE, Adithya institute of Tech, Coimbatore*
[4]*Asst. Prof. , Dept. of ECE, Adithya institute of Tech, Coimbatore*

Abstract -- Green plants are very much important to the human environment; they form the basis for the sustainability and long term health of environmental systems. Thus it is very important to grow healthy plants. The plant disease could be cured if it is known in the earlier stage. In this paper, we have proposed a system using raspberry pi to detect healthy and unhealthy plants & alerts the farmer by sending email. We have used tensor flow tool for numerical computation. It can be used in an controlled environment farms such that it detects the signs of disease whenever they appear on the leaves of the plant.

Indexed Terms: Convolutional Neural Network, Raspberry Pi, Tensor Flow

I. INTRODUCTION

India is cultivated country and about 70% of the population depends on agriculture. Farmers have large range of diversity for selecting various suitable crops and finding the suitable pesticides for plant. Disease on plant leads to the significant reduction in both the quality and quantity of agricultural product. The studies of plant disease refer to the studies of visually observable patterns on the plants. Monitoring of health and disease on plant plays an important role in successful cultivation of crops in the farm. In early days the monitoring and analysis of plant diseases were done manually by the expertise person in the field. This requires tremendous amount of work and also requires excessive processing time. The system uses raspberry pi to detect healthy and unhealthy leaves by training images and finding accuracy

II. LITERATURE SURVEY

Plant diseases have turned into larger problems as it cause significiant reduction in both quality and quantity of agricultural products. Spinach Leaf pests and diseases affect food crops,causing significiant losses to farmers and threatening food security. The spread of leaf diseases has increased dramatically in the recent years due to environmental pollution and many other causes. Following the discovery of the causes of plant diseases in the early ninetieth century, growing understanding of the interactions of the pathogen and host has enabled us to develop a wide array of measures for the control of specific plant diseases.

From the advent machine learning techniques, many people have tried and classified palnt disease. Kim et al.(2009) have classified the grape fruit peel diseases using color texture features analysis. The texture features are calculated from the spatial gray-level dependence Matrices (SGDM) and the classification is done using squared distance techniques. Grape fruit peel might be infected by several diseases like canker, copper, burn, greasy spot, melanose and wind scar. Helly et al. (2003) developed a new method in which Hue saturation intensity transformation-transformation is applied to the input image, then it is segmented using Fuzzy c-mean algorithm. Feature extraction stage deals with the color, size and shape of the spot and finally classification is done using neural networks.

Fig. 1: Healthy and unhealthy spinach leaf

The common diseases are fungal, Damping-off and root rot, Downy mildew, Fusarium wilt, White rust.They are being caused due to fungi. Disease emergence is favoured by very wet weather, spores are spread by splashing water. Symptomatic plants are often found in low-lying areas of the field or garden where water accumulate,disease symptoms are similar to symptoms caused by over watering plants. The symptoms in white rust are due to yellow spots on upper side of leaves, clusters of white, blister-like pustules on underside of leaves which may spread to upper leaf surfaces in advanced stages infection, infected plants show a loss of vigor and collapse if conditions are favourable to rapid disease development The diseases that can be commonly affected in spinach are Downymildew, Anthracnose, Cladosporium Leaf spot, Stemphylium leaf spot, Damping off and root rot. The favourable conditions for spinach to be maintained are high humidity, high soil moisture, cloudiness and low temperatures below 24 degree celsius for few days are ideal.

III. ARCHITECTURE

The block diagram of the proposed the system is shown. Our proposed system will be able to detect the disease and classify it. It requires power supply, raspberry pi3, Internet, E- mail, Raspberry pi camera. In this process, we have to send command to the camera. It is directly connected to the raspberry pi. Using the USB connection, the power supply is being provided. Using tensor flow, the image is being Processed and detected by the raspberry pi.

a) Block Diagram Description:

1. Power Supply:

This system requires 5V, 1A POWER SUPPLY. The raspberry pi model has the special connection. Using the USB connection power supply can be provided.

2. Camera:

It is used to capture image of the crops. It is directly connected to raspberry pi model. There are two ways to connect raspberry pi model. First one is USB port and second one is 15 pin header provided for camera interface of raspberry pi

3. Raspberry PI:

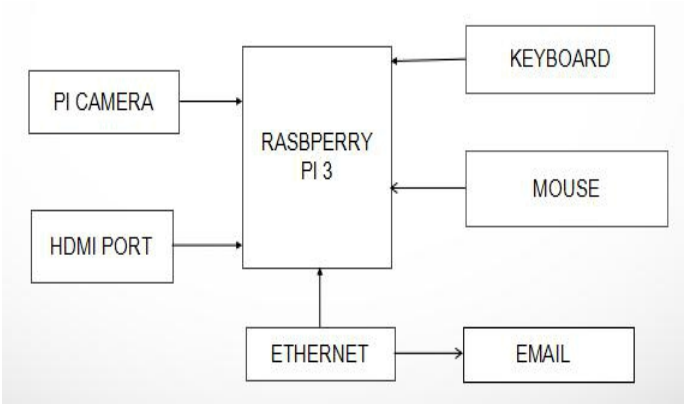

Fig. 2: Block diagram of the proposed system

Raspberry pi is a small size module like a small computer. The image captured by camera is sent to the raspberry pi. Using tensor flow, the image is processed and detected by the raspberry pi.

4. GSM:

It is used to send the email to the owner of the system. This email contains the name of the disease detected by the processor.

5. MONITOR AS DISPLAY

The monitor is used to display the detected disease name and also the pesticide name.

6. E-MAIL

The e-mail is sent to the owner of the system. This email contains whether the plant is disease affected or not. Thus, our proposed system will be able to detect the disease.

b) Usecase:

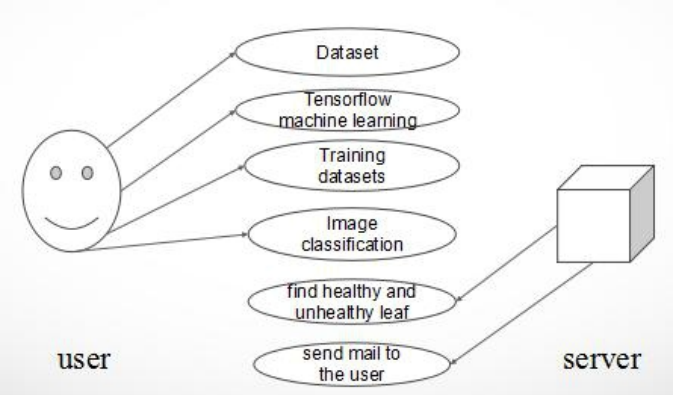

Fig. 3: Usecase

IV. ENVIRONMENTAL SETUP

The Raspberry pi 3 features include CPU, GPU, memory, USB ports, video outputs and Network. The CPU quad-core is 64-bit ARM cortex A53.The GPU has 400MHZ videocore IV multimedia. The memory is 1GB LPDDR2-900 SDRAM (900 MHZ).There is 4 USB ports. The video outputs are HDMI, composite video (PAL and NTSC) via 3.5mm jack. The network range is about 10/100 Mbps Ethernet and 802.11n Wireless LAN. Peripherals have 17 GPIO plus specific functions and HAT ID bus. The bluetooth range is about 4.1. The power source is about 5V via micro USB or GPIO header. The weight is about 45g[1.6oz]

The raspberry pi camera board is fully compatible with the both model A and model B Raspberry pi. It has 5Mp omnivision 5647 camera module. The still picture resolution for the pi cam is 2592 into 1944. The video supports 1080p @30fps,720p @60fps and 640 into 480pl90 recording. It has 15-pin MIPI camera serial interface- plugs directly into the the Raspberry pi board. The size is about 20 into 25 into 9mm. The weight is 3g and it is fully compatible with many raspberry pi cases. The Raspberry pi camera is able to deliver a crystal clear 5MP resolution image, or 1080p HD video recording at 30fps.Thw module attaches to Raspberry pi, by a way of a15 pin MIPI camera serial interface (CSI) which was designed especially for interfacing to cameras. The camera is supported in the latest version of the raspbian.

Raspberry pi camera can be accesed by installing the raspberry pi camera module cable into the raspberry pi. The cable slots into the connector situated between the ethernet and the HDMI ports, with the silver connectors facing the HDMI por. Run “sudo raspi_config”- Now we can see the camera option. Before starting the process, we have to install raspbian os on raspberry pi. The first step is to download the required software and files. The first software is win32 disk imager, second is SD card formatter and the third software is Raspbian OS. Next step is get an SD card and transfer the raspbian software into the SD card.

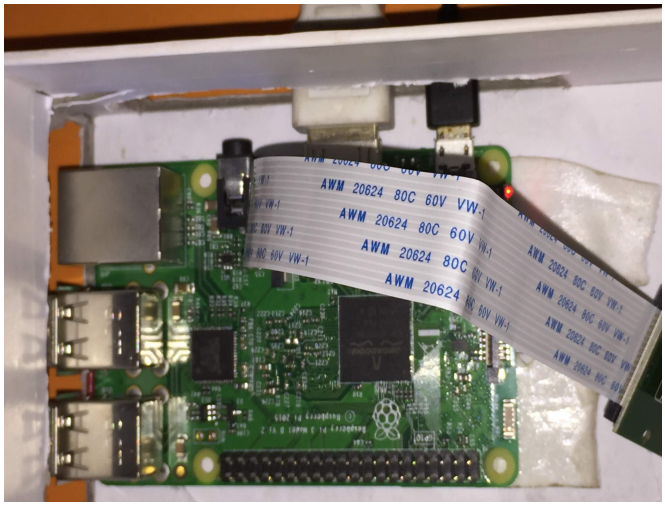

Fig. 4: Environmental set up

The proposed system was developed using Raspberry pi. The environmental set up for the developed system is shown in fig 4.The work was prototyped and we have used tensor flow for numerical computation. Here we are going to use a model trained on the image net large visual recognition challenge dataset. These models can differentiate 1,000 different classes. The tensor flow application is installed. All the code used in the code lab is contained in the git repository. By cloning the repository and cd into it.

In the next step, we need a set of images to teach the images to teach the model about the new classes that we want to recognize. we have to create archive of spinach leaf photos initially by downloading the photos. By now, we have a copy of flower photos. we can confirm the contents of the working directory by issuing the following command:

ls tf_files/file_name

The preceding command should display the objects contained in the working directory. In the next step, we have to retrain the mobile net. MobileNet is a small efficient convolutional neural network. convolutional just means that the same calculations are performed at each location in the image. The mobileNet is configured using 224 0.5 for this code lab. With the recommended settings, it typically takes a couple of minutes to retrain. we have to pass the

settings inside Linux shell variables. Set those variables in the shell:

IMAGE_SIZE=224

ARCHITECTURE=''mobilenet_0.50_${IMAGE_SIZE}"

Once the script gets finished generating all the bottleneck files, the actual training of the final layer of the network begins. By default, this script runs 4,000 training steps. Each step chooses 10 images at random from the training set, finds their bottlenecks from the cache, and feeds them into the final layer to get predictions. As it trains, you will see a series of step outputs, each one showing training accuracy, validation accuracy and the cross entropy. The **training accuracy** shows the percentage of the images used in the current training batch that were labelled with the correct class. The **validation accuracy** is the precision on a randomly-selected group of images from a different set. The **cross entropy** is a loss function that gives a glimpse into how well the learning process is progressing. The retraining script writes data to the following two files:

tf_files/retrained_graph.pb, which contains a version of the selected network with a final layer retrained on the categories tf_files/retrained_labels.txt, which is a text file containing labels.

For testing the network, we can use the following script:

Python -m scripts.label_image -h

Fig. 5: capturing image using raspberry pi cam

V. WORKING & RESULTS

We have trained the Convolution Neural Network application with more than 1000 healthy leaves and disease infected leaves. Training the tensor flow takes time about 45 minutes depending on the number of dataset that we provide. The accuracy of identifying the disease is proportional to the number of datasets. After training, the command for capturing the real time leaf is executed through the terminal window. The raspberry pi camera after capturing the leaf compares the image with the dataset that we have provided and gives the result. The result is based on the dataset provided, which signifies the percentage of leaf affected by disesase and which are not. We can improve the accuracy by incresing the dataset. After all the training steps are complete, the script runs a final test accuracy evaluation. The test evaluation provides the best estimate of how the trained model will perform on the classification task.

By running script on the image. Each execution will print a list of leaf.

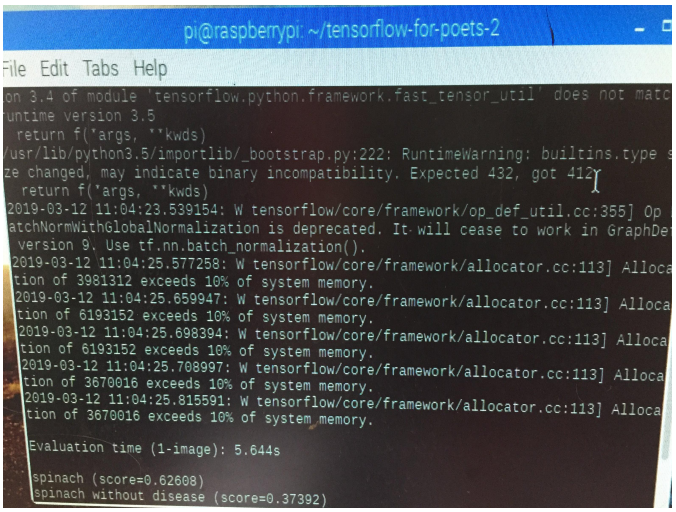

Fig. 6: Results

After the analysis, the results will be shown in the command window. The results are shown in the fig.6. Based on the percentage of the disease the data's will be sent to the farmer for his update through mail. The mail process will be intiated, if the disease affected spinach leaf is detected through Pi cam.

Our project helps the farmer to improve the yield by monitoring the field & also reduces the human interference in the farm.

VI. FUTURE WORK

In this paper, we have proposed a system using raspberry pi which can detect disease infected leaf. The project has many verticle int leaf detection. So far we have achieved in detecting the disease affected leaf. In future we will seggregate the disease whether it is affected by bacteria, fungi or viral and specify the solution to the farmer in the field.

VII. CONCLUSION

The project deals with identifying the disease affected leaf. This is achieved through the Convolutional Neural Network Algorithm. If the leaf is affected by disease then the information is shared through the mail. This helps the farmer to find a solution without coming towards the field.

VIII. ACKNOWLEDGEMENT

The authors would like to thank Er. C. Sukumaran for his constant encouragement. Special thanks for providing sophisticated laboratory facilities, for carrying out this work. The authors would like to thank Dr. S. muthu for his unconditional support during the design and development of the proposed system.

REFERENCES

[1] Nitrogen fixation' available at https:\\en.wikipedia.org/wiki Nitrogen fixation, accessed February 2017

[2] Savary, s., ficke, A, Aubertort,j-n.,et al crop losses sue to disaeses and their implications for global food production losses.

[3] Mian MA. Missaoui, A.M walker D.R .,et al: 'frog eye leaf spot of soybean: a review and proposed race designations for isolates of sercospora sojina hara.

[4] soybean diseases available at https://alliedcooperativefiles.filesw.wordpress.com/2014/7/soybeandiseases.pdf, accessed january 2017

[5] Shrivastava. S., Hooda, D.s automatic brown spot and frog eye detection from the image captured in the field.,am.j.intell.syst.2014

[6] Li,x. yang, X.B., 'similarity, pattern and grouping of soybean fungal diseases in the united states implications for the risk of soybean rust.