POWER QUALITY CONTROL

Resolving Power Quality Issues Using a Convolutional Neural Network Based Fuzzy Logic Controlled DSTATCOM

Adamu Sa'idu[1, 2], Nasiru B. Kadandani[1*], Bala Boyi Bukata[1], Abdurrahman U. Lawan[1], Ibrahim H. Shanono[1]

[1]Department of Electrical Engineering, Faculty of Engineering, Bayero University Kano, Kano, Nigeria
[2]Department of Electrical/Electronic Technology, School of Secondary Education (Technical), Federal College of Education (Technical) Bichi, Kano, Nigeria

Published November 2026

Abstract

Power quality (PQ) disturbances like voltage sag, swell, harmonic and reactive power imbalance vehemently influence reliability and performance of contemporary power distribution systems. Distribution Static Compensator (DSTATCOM) has appeared to be efficient custom power device for reducing and mitigating these issues. Conventional control techniques like Proportional-Integral (PI) controllers always battle with parameter tuning, nonlinear dynamics, and adaptability to rapidly varying grid conditions. This paper describes a hybridized convolutional neural network based fuzzy logic controlled DSTATCOM for resolving power quality problems using reactive current reference control algorithm at distribution corridor. DSTATCOM is used to give out reactive power compensation and grid power factor (PF) correction at point of common coupling (PCC) with changing load condition. Targeted algorithm uplifts transient condition with supervisory fuzzy logic control which reduces DSTATCOM reactive current ripples. DSTATCOM reactive current reference control algorithm was conveyed and performance of the algorithm was obtained using Matlab/Simulink software for steady and transient state situations. Integration of CNN based FLC adaptive compensation for the DSTATCOM to achieve improved power quality and lower THD is the major concern of this approach. The hybridized approach had been proved to portray quicker response and smaller settling time with almost non overshoot when compared with other conventional methods. A remarkable record of total harmonics distortion on voltage (THD_V) minimization of 1.14% has been achieved which indicates the approach suitability and superiority in mitigation PQ problems.

Keywords: power quality problems; fuzzy logic control; DSTATCOM; convolutional neural network; reactive current reference control

1 Introduction

The incessant growing need for stable and uninterrupted quality of power supply has seriously increased because of the proliferation of sensitive industrial loads, nonlinear loads, renewable energy and smart grid technologies systems. Power quality (PQ) has been used to portray the changes in voltage, current and frequency in power system. PQ problems like sags, swells, flickers, unbalances and harmonics cause severe economic and technical losses in distribution networks. Numerous PQ problems, such as harmonic distortion, low power factor (PF), noise, voltage sag, voltage swell, impulse, voltage unbalance and voltage fluctuation had been drastically minimized using custom power devices (CPD), for instance Alhattab (2023) which emphasized on the application of CPDs in correcting PQ problems. The CPDs are advanced techniques of mitigating power quality problems at

distribution level, developed to replace flexible alternating current transmission systems (FACTSs) devices typically used at transmission level for enhancing system stability and transfer capacity of the transmission lines (Ali et al., 2017). The CPDs have been identified to offer good practical proficiency to power quality problems at distribution corner (Gadhawe & Kasulkar, 2021). Of all CPDs, DSTATCOM has played a significant role in curbing out PQ problems as noted in (Hossain et al., 2018). DSTATCOM works in two control modes viz; current controlled mode (CCM) and voltage controlled mode (VCM). In CCM, DSTATCOM injects harmonic currents and compensate for reactive components while it regulates voltage at PCC and donates reactive power support in voltage controlled mode.

Conventional control strategies for DSTATCOM, typically based on PI controllers, are simple but limited by sensitivity to system nonlinearities and parameter variations. Fuzzy Logic Controllers (FLCs) have been introduced to overcome these limitations due to their rule-based reasoning and nonlinearity handling capabilities. However, standalone FLCs require manual design of membership functions and rule bases, making them difficult to generalize and adapt across different operating conditions. This research addresses these limitations by proposing a convolutional neural network based fuzzy logic control (**CNN – FLC)** DSTATCOM. CNN automatically extracts patterns from PQ disturbance signals, updating fuzzy rules dynamically for optimal control thereby generating control signals for the DSTATCOM.

Remaining part of this work was organized as follows: Section 2 presents basic concept of DSTATCOM detailing its mode of operation and control technique. In section 3, control technique based on fuzzy logic controller was presented. Results and discussion were presented in section 4. Some conclusions were drawn in section 5.

2 Concept of the distribution static compensator

DSTATCOM is a parallel connected device designed to stabilize voltage either by generating or absorbing reactive power (Gajjar and Zaveri, 2018). The schematic diagram of DSTATCOM is shown in Figure 1. DSTATCOM consists of DC link capacitor, voltage source converter (VSC), coupling transformer and reactor. The VSC generates voltage from charged capacitor using pulse width modulation switching technique which is supplied to the system via reactance of the coupling transformer (Ullah & Hanif, 2021). Voltage variation across reactor is used to generate active and reactive power exchange between DSTATCOM and AC supply network (Khan *et al*., 2022). This power transfer is quicker and enhances performance of the entire system network (Gadhawe and Kasulkar, 2021). The principal objectives of DSTATCOM are power factor correction, current harmonics refining, DC load offset cancellation and load balancing. Some of the advantages of using DSTATCOM over other custom power devices are negative sequence current compensation, reactive power of various loads compensation, effective elimination of harmonics caused by nonlinear loads, harmonic compensation and load balancing, improvement of voltage and current harmonic distortion.

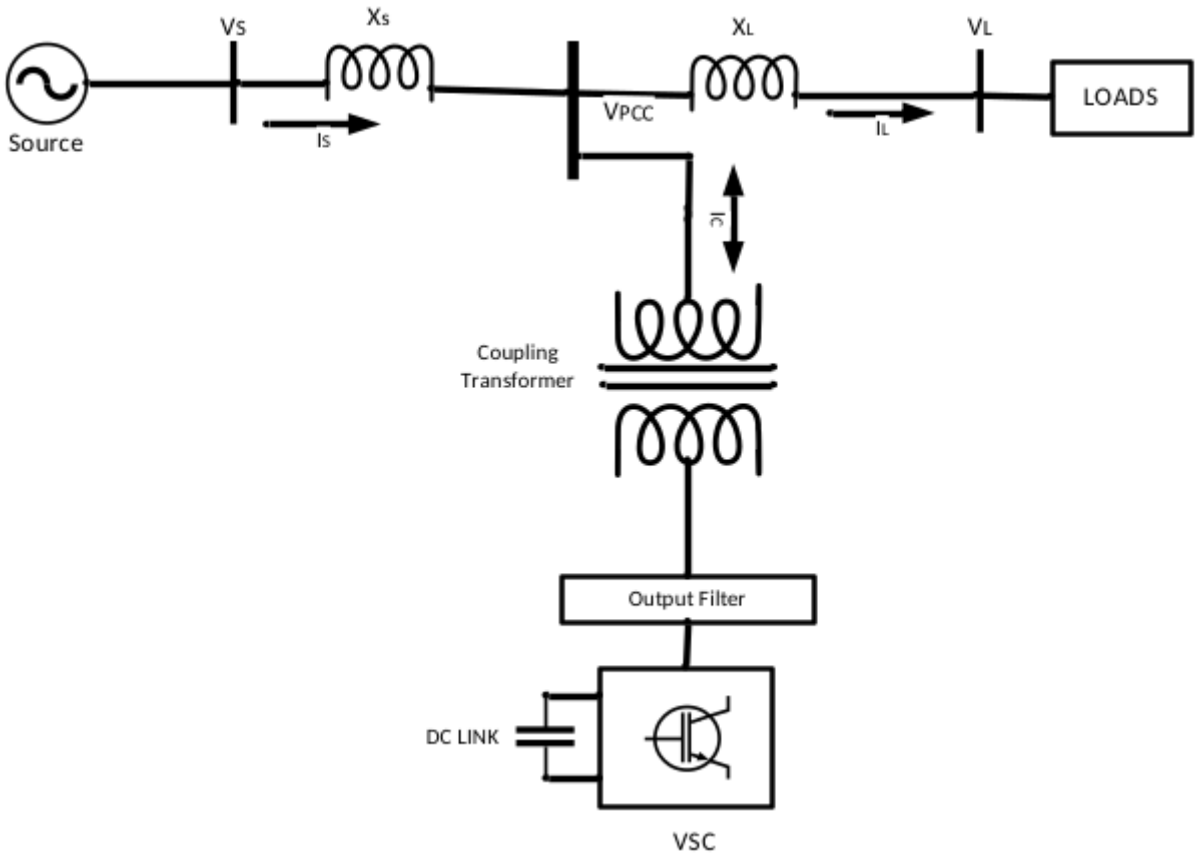

Figure 1. Schematic diagram of the DSTATCOM.

2.1 Operation of the DSTATCOM

DSTATCOM is proficient of reimbursing bus voltage or line current. It works in two conditions based on the variable it stabilizes. DSTATCOM can either be function as voltage control mode (VCM) or current control mode (CCM). In VCM, bus voltage can be made balanced sinusoids, despite the voltage distortion in the supply side or line current. Equally in CCM, source side currents can be compelled to be balanced sinusoids (Kantar & Tedeschi, 2020). The achievement of DSTATCOM has to do with design of power circuit components, control algorithms estimating compensation signals with less computation, pulse width modulation swapping method to generate shifting pulses and cohesion planned control algorithms (Singh, 2018). Operating principle of DSTATCOM in voltage quality extenuation suppress bus voltage by injecting preoccupying reactive power. Hence for this reason, DSTATCOM functions as inductor or as capacitor depending on amplitude of bus voltage as shown in Figure 2.

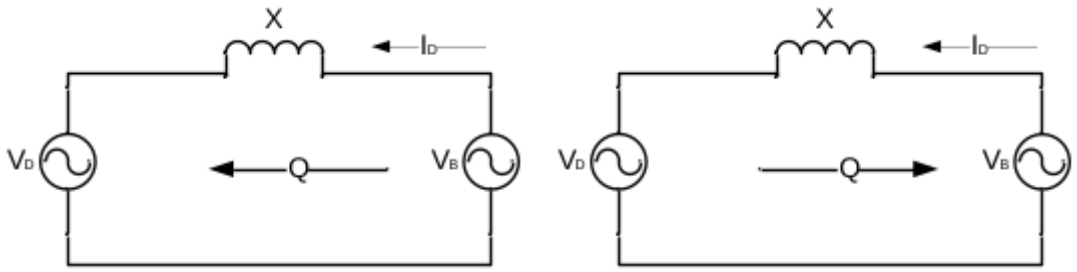

Figure 2. Operational principle of the DSTATCOM: (a) absorption mode, (b) generation mode.

Active and reactive power transfer between DSTATCOM and PCC can be done using equations (1) and (2).

$$P = \frac{V_{pcc}V_1}{X_{\text{coupling}}} \sin\delta\left(1\right) \tag{1}$$

$$Q = \frac{V_{pcc}^2}{X_{\text{coupling}}} - \frac{V_{pcc}V_1}{X_{\text{coupling}}} \cos\delta\left(2\right) \tag{2}$$

where V_{pcc} is voltage obtained at PCC, V_1 is DSTATCOM output voltage, X_{coupling} is DSTATCOM coupling reactance and δ is phase angle between V_{pcc} and V_1.

2.2 DSTATCOM control techniques

Solving PQ problems in distribution network like transients, flicker, under voltage or overvoltage can be achieved using conventional capacitor banks, recloser circuit breakers or surge arresters in some specific locations (Abdelsalam et al., 2020). Even though, for steady state functioning of system that suffers threats of major issues of sag, swell, interruption, imbalance and harmonic distortions, it is critical linking DSTATCOM to strong strategy that can cater for transients emanating from consumer's load. Performance will be improved by introducing DSTATCOM to interfere with both transient and steady state network operations (Juan et al., 2015). Steady-state performance is the one whereby the harder PQ disturbances like sag, swell, interruption and harmonic distortions incline to maximize network attacks. However, the boring effects of PQ issues are seemly intolerable to consumers, utilities and other stakeholders in power sector. Hence, looking for cost effective and robust DSTATCOM controllers subject to furnishing the needful for upcoming future grid shortly escalated. Efficacy of DSTATCOM control algorithm majorly rely on its ability in producing reference current signals (Gadhawe and Kasulkar, 2021). Figure 3 describes single line diagram of power system with control arrangement connected at PCC through DSTATCOM.

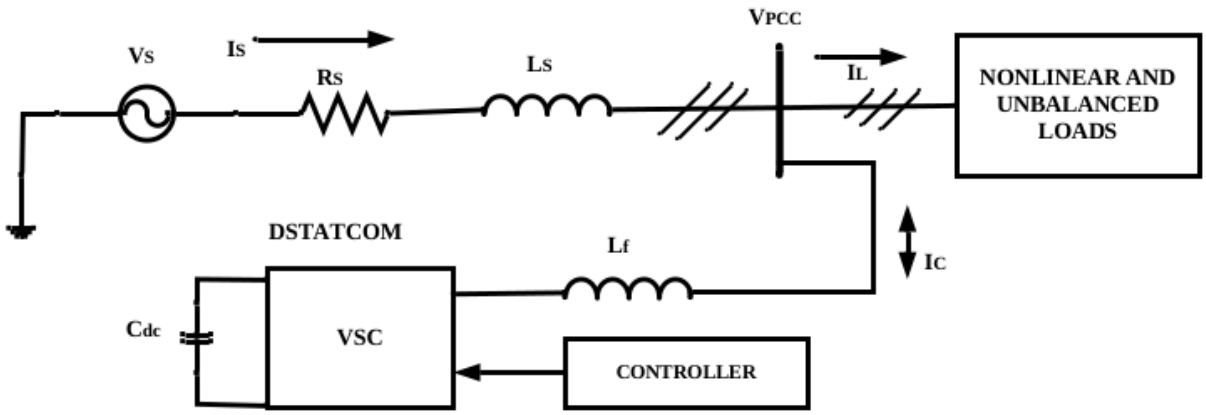

Figure 3. DSTATCOM control arrangement at the point of common coupling.

Many conventional control techniques such as synchronous reference frame (SRF), instantaneous reactive power theory (IRPT), symmetrical component theory, average unit power factor, hybrid least mean square - least mean fourth (LMS - LMF) and leaky LMS current control had been presented in (Joythi et al., 2021) that employs usage of filters to produce reference current signals from load current. Phase locked loops (PLL) had also been used to extract reference current signals (Rohouma et al., 2020). However, intelligent controllers like PI controller, PID controller, model predictive control, sliding mode control, artificial neural networks and fuzzy logic control have gathered

extrusion for the control of DSTATCOM. Intelligent controllers resulted in better transient's feedback than conventional controllers as features are automatically updated due to system variations (Sagar and Satti, 2018) simplifying its execution using basic mathematical models.

Performance of CNN – FLC – DSTATCOM algorithm can be better by enhancing the output of the current controllers using feed forward decoupled control method. The unit control signal output of the current controllers are added with disturbance voltage signal and cross – coupling terms to obtain better control output signal. Complete block diagram of improved CNN – FLC – DSTATCOM algorithm is shown in Figure 6. To realize the improved decoupled of d-axis and q-axis current, cross-coupling terms and disturbance voltages are added to the outputs of current controllers. Then, the produced V_d and V_q are changed to modulation signals and switching angle. Again in SRF theory, $V_s = V_{sd}$ and $V_{sq} = 0$, hence for this reason, unit voltage control, magnitude of disturbance voltage signal and cross – coupling terms are summed up to produce better output voltage control signals of the current regulators as shown in Figure 4.

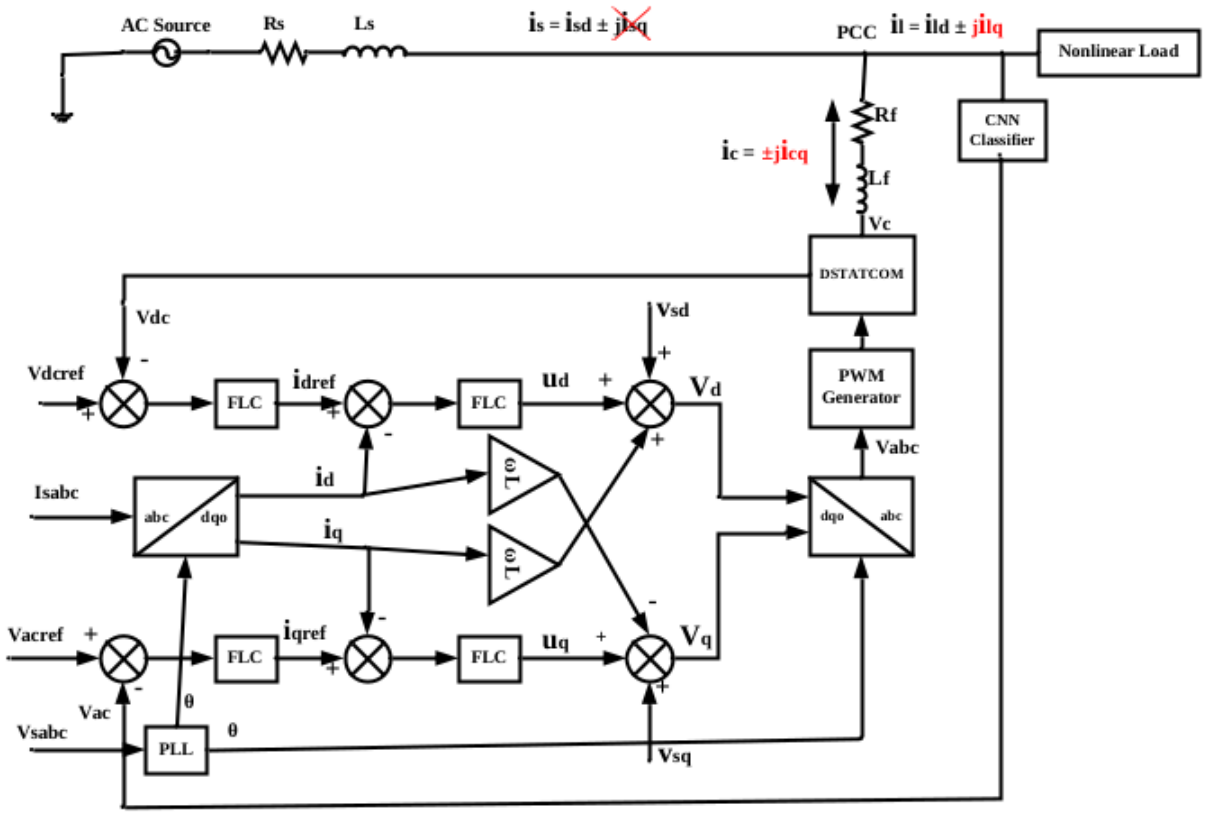

Figure 4. Single-line diagram of the improved CNN-FLC-DSTATCOM algorithm.

3 Mathematical modelling of the DSTATCOM

Axes of the converter (d-axis and q-axis components) can be expressed in terms of modulation index (m) and phase angle (δ) between DSTATCOM and AC grid voltage as

$$m = \frac{\sqrt{V_d^2 + V_q^2}}{kV_{dc}} \tag{3}$$

$$\delta = \tan^{-1}\left(\frac{V_d}{V_q}\right) \tag{4}$$

where V_{dc} is the dc link capacitor voltage and k is the constant amplitude depending upon modulation technique.

In order to control the DC voltage effectively, power of DC side should be equal to power of AC side. Power balance between DC and AC side can be written as

$$P_{AC} = \frac{3}{2}\left(V_{sd}i_d + V_{sq}i_q - \left(i_d^2 + i_q^2\right)R\right) \tag{5}$$

$$P_{DC} = CV_{dc}\frac{dV_{dc}}{dt} + \frac{V_{dc}^2}{R_{dc}} \tag{7}$$

Since $P_{AC} = P_{DC}$, the two equations become

$$\frac{dV_{dc}}{dt} = \frac{3}{2}\left(\frac{V_d i_d + V_q i_q - \left(i_d^2 + i_q^2\right)R}{CV_{dc}}\right) - \frac{V_{dc}}{CR_{dc}} \tag{8}$$

This shows the dynamic behaviours of DSTATCOM's AC and DC side control. Exchanging of reactive power between DSTATCOM and grid is carried out by amplitude of current regulators' output voltage. The controllers output voltage are controlled using (9) ad (10).

$$V_d = \omega L i_q + V_{sd} + U_d \tag{9}$$

$$V_q = -\omega L i_d + U_q \tag{10}$$

Since, $V_{sq} = 0$

where U_d and U_q are unit control signals obtained from fuzzy logic controllers of current regulators as

$$U_d = \frac{k}{s}\left(i_{\text{dref}} - i_d\right) \tag{11}$$

$$U_q = \frac{k}{s}\left(i_{\text{qref}} - i_q\right) \tag{12}$$

where i_{dref} and i_{qref} are reference active and reference reactive currents and k is gain of fuzzy logic controller used in current control.

Hence, amount of apparent, active and reactive power transfer between power system and DSTATCOM are given by equations (13), (14) and (15) respectively.

$$S_c = V_{pcc}i_c \tag{13}$$

$$P_c = V_{\text{pccd}}i_{cd} - V_{\text{pccq}}i_{cq} \tag{14}$$

$$Q_c = V_{\text{pccd}}i_{cq} + V_{\text{pccq}}i_{cd} \tag{15}$$

Where V_{pccd} and V_{pccq} define the d-axis and q-axis grid voltage respectively.

Therefore, transfer function of DSTATCOM link dq coordinates is defined by

$$\begin{bmatrix} V_{cd} \\ V_{cq} \end{bmatrix} = \begin{bmatrix} V_{\text{pccd}} \\ V_{\text{pccq}} \end{bmatrix} - R_f \begin{bmatrix} i_{cd} \\ i_{cq} \end{bmatrix} - L_f \frac{d}{dt}\begin{bmatrix} i_{cd} \\ i_{cq} \end{bmatrix} + \omega L_f \begin{bmatrix} i_{cd} \\ -i_{cq} \end{bmatrix} \tag{16}$$

3.1 Reactive current reference control algorithm for the FLC-DSTATCOM

To boost efficiency of proposed approach, integration of external reactive current reference i_{cqref} algorithm to FLC – DSTATCOM is investigated. The FLC system driven by PWM technique is used to send control signal for DSTATCOM. Voltage across DC-link capacitor is controlled by shifting style of PWM scheme at every fundamental frequency cycle. RCRC (i_{cqref}) algorithm boosts transient performance of closed loop system with FLCs that minimizes DSTATCOM reactive current ripples. Single-phase DSTATCOM employing FLC is studied for effectiveness of proposed controller investigated using Matlab/Simulink software for both steady-state and transient conditions. The i_{cqref} algorithm basically produces opposite signal to the controller as a result of variation of DSTATCOM reactive current i_{cq} during steady-state condition, thereby, improving transient response as well as steady-state error without integral function in the feedback loop (Law et al., 2014). Proposed external reactive current reference i_{cqref} algorithm is obtained using variation between commanded voltage V_{cqref}, grid voltage V_{pcc} and voltage drop V_L across coupling inductor L_f. Assuming that DSTATCOM operating in quadrant I region and reached steady-state, d-axis current component and q-axis current component can be neglected as shown in Figure 5

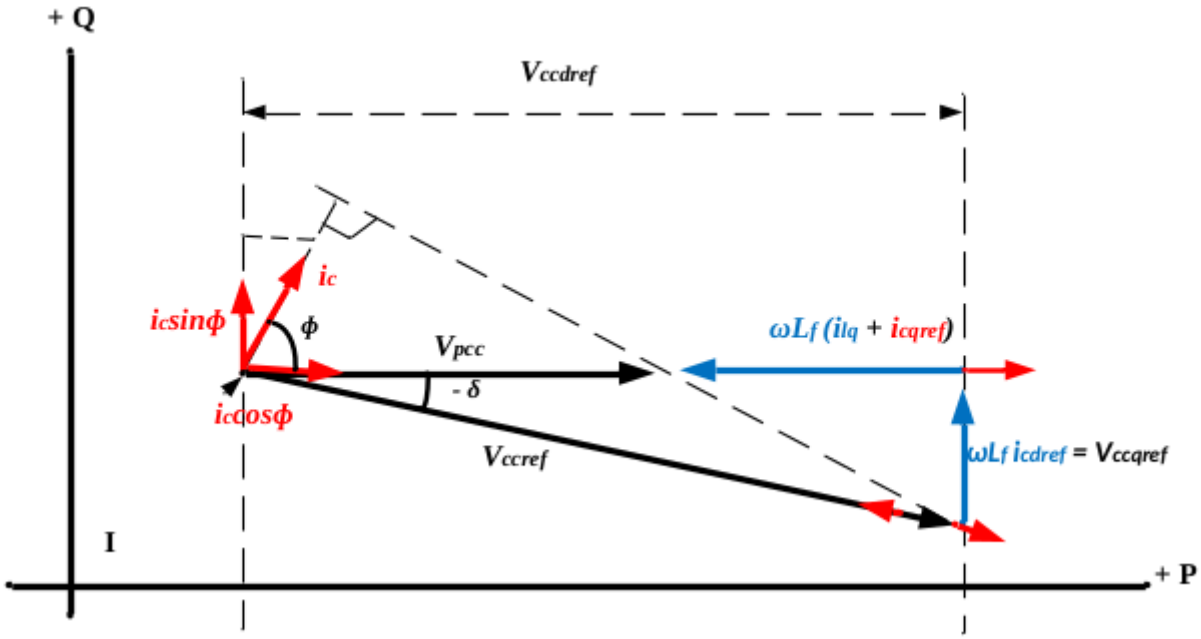

Figure 5. DSTATCOM operation in the first quadrant (Law et al., 2014).

The reference current control algorithm i_{cqref} can be derived from Figure 5 as follow

$$V_{\text{ccdref}} = V_{pcc} + \omega L_f i_{lq} \tag{17}$$

$$V_{\text{ccqref}} = \omega L_f i_{\text{cdref}} \tag{18}$$

Then,

$$V_{\text{ccref}} = 1 = \sqrt{\left(V_{\text{ccdref}}\right)^2 + \left(V_{\text{ccqref}}\right)^2} \tag{19}$$

where V_{ccdref} identifies d-axis DSTATCOM voltage functioning on required coupling signal $\omega L_f i_{lq}$, V_{pcc} determines d-axis grid voltage,V_{ccqref} defines q-axis DSTATCOM voltage working on current reference

value obtained and finally, V_{ccref} explains commanded voltage magnitude of vector sum of V_{ccdref} and V_{ccqref}.

Commanded reference voltage V_{ccref} is set at 1 p.u to determine DSTATCOM voltage $V_c$without variation in steady-state condition. By referring to (19), V_{ccdref} is re-defined as follow:

$$V_{\text{ccdref}} = \sqrt{1 - \left(V_{\text{ccqref}}\right)^2} \tag{20}$$

By substituting (19) into (20) and equating (17) with (20), one can simply define i_{cqref} as follows:

$$V_{pcc} + \omega L_f i_{lq} = \sqrt{1 - \left(V_{\text{ccqref}}\right)^2} \tag{21}$$

$$V_{pcc} + \omega L_f i_{lq} = \sqrt{1 - \left(\omega L_f i_{\text{cdref}}\right)^2} \tag{22}$$

$$\left(V_{pcc} + \omega L_f i_{lq}\right)^2 = 1 - \left(\omega L_f i_{\text{cdref}}\right)^2 \tag{23}$$

$$V_{pcc}^2 + \left(2 \times V_{pcc} \times \omega L_f i_{lq}\right) + \left(\omega L_f i_{lq}\right)^2 = 1 - \left(\omega L_f i_{\text{cdref}}\right)^2 \tag{24}$$

$$2 \times V_{pcc} \times \omega L_f i_{lq} = 1 - \left(\omega L_F i_{\text{cdref}}\right)^2 - \left(\omega L_f i_{lq}\right)^2 - V_{pcc}^2 \tag{25}$$

$$i_{lq} = i_{\text{cqref}} = \frac{1 - \left(\omega L_f i_{\text{cdref}}\right)^2 - \left(\omega L_f i_{lq}\right)^2 - V_{pcc}^2}{2 \times V_{pcc} \times \omega L_f} \tag{26}$$

From Figure 1, voltage drop V_L is given as follow:

$$V_L = \sqrt{\left(\omega L_f i_{\text{cdref}}\right)^2 + \left(\omega L_f i_{lq}\right)^2} \tag{27}$$

Hence, by substituting (27) in (26), proposed reactive current reference algorithm ($.i_{\text{cqref}}$) can be given as in (28):

$$i_{\text{cqref}} = \frac{1 - V_L^2 - V_{pcc}^2}{2 \times V_{pcc} \times \omega L_f} \tag{28}$$

This reactive current together with DSTATCOM output current is used to track the voltage difference of the controller as given in (29).

$$i_{\text{qref}} = i_{\text{cqref}} + i_{cq} \tag{29}$$

From equation (28), proposed i_{cqref} will be zero or bypassed when grid voltage V_{pcc} is unity (PF correction produced by DSTATCOM as a result of load reactive current i_{lq} is unity). Although, for converter nonlinearity, marginal voltage difference between grid voltage V_{pcc} and DSTATCOM output voltage V_c (V_L not equal to zero) is invariably grew especially during steady-state condition. Ensuring tracking of demand signal (i_{lq}), proposed i_{cqref} is deployed together with DSTATCOM output current i_{cq} to trace voltage difference and feed-forward to decoupling control scheme (addition to commanded load reactive current i_{lq}) to produce required counter reaction accordingly (minimizes DSTATCOM reactive current ripples). Figure 6 describes block diagram of i_{cqref} represented by (29).

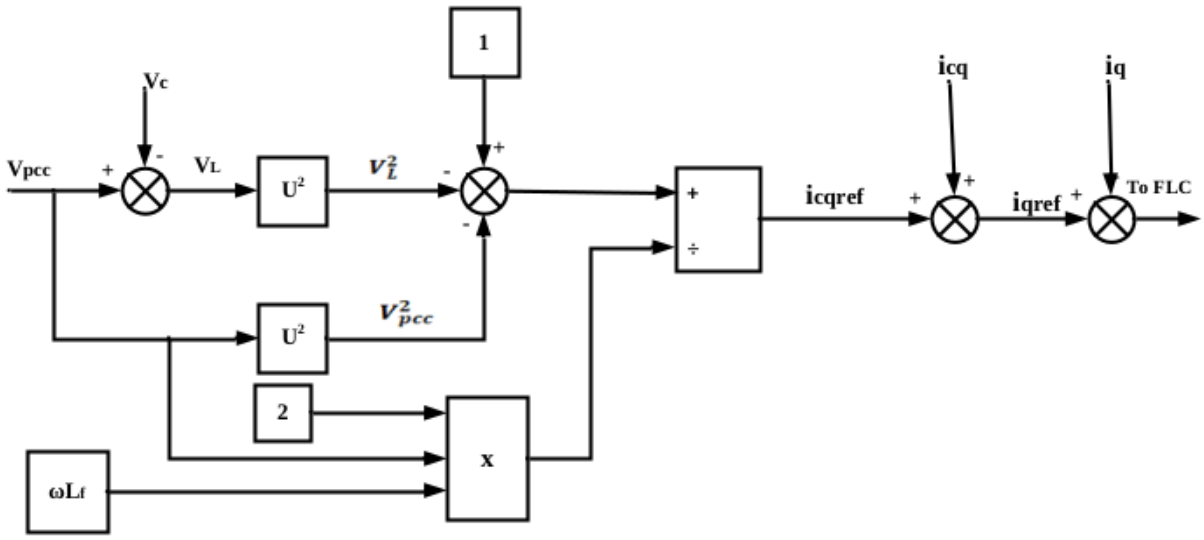

Figure 6. Block diagram of the external reactive current reference algorithm.

4 Results and discussion

In this section, CNN – FLC – DSTATCOM algorithm was implemented using Matlab Simulink and SimPowerSystem software package. Series simulations were undertaken to ascertain the efficacy of proposed approach using system parameters indicated in Table 1. A new reference current control algorithm was incorporated to boost and optimize the efficiency of the approach and further assists in reactive power reduction and as well as current harmonics elimination. The results for DC link voltages for DSTATCOM controlled and FLC – DSTATCOM conditions are compared.

Table 1. List of DSTATCOM system parameters.

Parameter	Symbol	Values
System Frequency	f	50Hz
Resistance	R	1.0Ω
DC Link Capacitor	C_{dc}	8500μF
AC Interface Inductance	L_f	1.4mH
DC Link Voltage	V_{dc}	700V
Feeder AC Line voltage	V_{LL}	415/220volts
Rated VSC Current	I_O	71.42A
Switching frequency	f_s	10kHz
Power Rating of VSC	S_{VSC}	33kVA
Power Rating of Load	S_L	50kVA
Power Factor Angle	θ	37^0 0.8 lagging

Furthermore, incorporation of CNN – FLC – DSTATCOM minimizes PQ problems strength. The steady state operation at PCC, active and reactive power during sag and swell conditions were shown in Figure 7 (a) and (b) respectively. Power exchanges involved during the sag situation created anomaly of the active component indicated in Figure 7(a). The reactive power demand was said to occur by the

swift decrease in current causing the sag from its approximate nominal value of 0.035MVAr to 0.005MVAr at the end of the sag. Similarly, power transfers occurred during swell condition reversed anomaly of active component shown in Figure 7(b). Again, quantity of reactive power developed by current rush can be observed shooting from its nominal 0.015MVAr to 0.055MVAr at end of the swell.

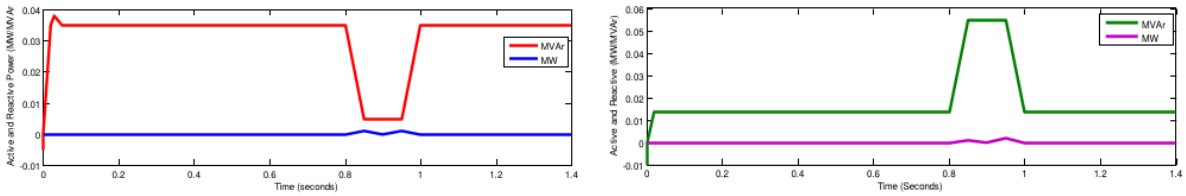

Figure 7. Step response of active and reactive power: (a) sag, (b) swell.

The proposed CNN – FLC – DSTATCOM approach is now introduced into the power system and performance subsequently evaluated after simulations where voltage and current in the identified PQ problems had for once been mitigated. Figure 8 (a) depicts step responses of active and reactive powers mitigated apart from no – load voltage condition at PCC respectively. Active power is kept at zero while reactive power reaches its peak value of 0.013MVAr for input signals shown in Figure 8(a).

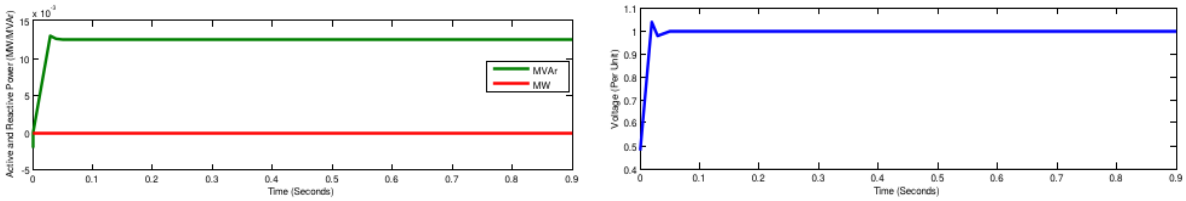

Figure 8. FLC-DSTATCOM step responses: (a) MW and MVar mitigated, (b) mitigated voltage.

The mitigated voltage step response is seen to have shoot up to 1.05 per unit before it settles at 1.0 per unit when the FLC – DSTATCOM controller is connected as described in Figure 8(b). Current surge generated in tackling deficiency acted between 0.8 – 0.95s (0.15s), before restoring normal operations.

Performance of DSTATCOM in relation to transition in load current I_{lq} is depicted in Figure 9(a). Specifically, the figure describes dynamic response of DSTATCOM reactive current Icq exhibiting undershoots without connection of proposed control algorithm. Figure 9(b) displays behaviours of DSTATCOM reactive current Icq with proposed control algorithm connected. Looking at the Figure 9 both (a) and (b) critically, it obviously described that steady – state error and transient response of DSTATCOM involving proposed control algorithm to transition of load current was highly enhanced and at the same time achieving faster system response. Although, the importance of CNN – FLC – DSATACOM algorithm is realized, variation of measured DSTATCOM reactive current Icq was also mitigated.

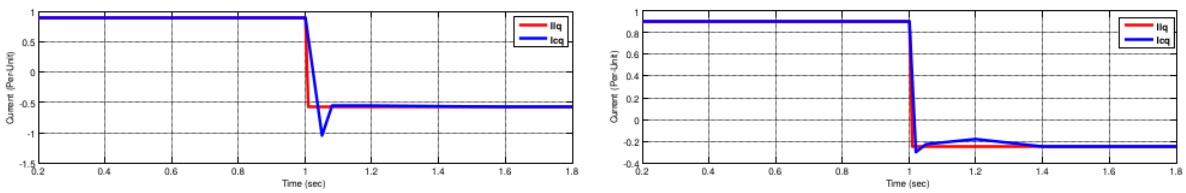

Figure 9. Transition in load current I_{lq} and DSTATCOM reactive current I_{cq}: (a) without controller, (b) with controller.

Phase – lock loop (PLL) needs some delays of half fundamental cycle for DSTATCOM output voltage (Vc) to be synchronized with Vpcc's voltage phase angle (θ), effect of this delay on grid current (is) during change in load condition was demonstrated in Figure 10, causing VAR transfer that exists between DSTATCOM and grid line forcing DSTATCOM to exhibits some oscillations or spikes when load changes. Essence of the scenario is observed in Figure 10(a). More so, described in Figure 10(b), when CNN – FLC – DSTATCOM algorithm had been incorporated to decoupling feed-forward current vector controller, spikes in grid reactive current (isq) is considerably reduced by 50%.

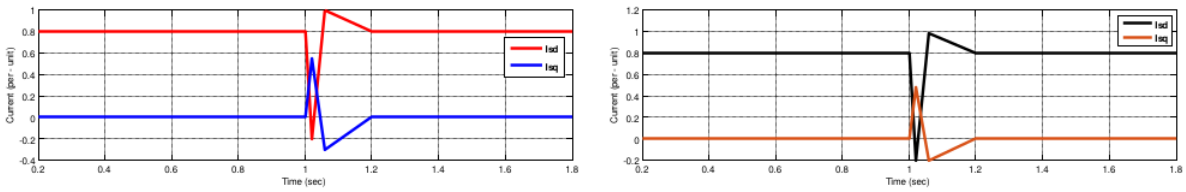

Figure 10. Grid active current i_{sd} and reactive current i_{sq}: (a) without and (b) with the FLC-DSTATCOM.

To obtain total harmonic voltage distortion (THD_V) analysis of the approach, system is analyzed without DSTATCOM, with DSTATCOM and with CNN – FLC – DSTATCOM compensation for nonlinear load where waveforms distortion was analyzed and THD_V values were measured using FFT analysis. Figures 11 to 16 describe the FFT analysis of each condition mentioned above indicating its THD_V analysis. All conditions had been presented and compared in Table 2 in terms of superiority. It can be seen apparently from Table 2 that first condition is worst case with THD_V up to 25.85% when DSTATCOM is not connected. With the deployment of DSTATCOM in the second condition, THD_V is drastically reduced to 10.36% which is less than 50% of the first case. All the first and second conditions have not met the provisional requirement made by IEEE Std. 1159 - 2014 for keeping THD_V within 5%. However, when applying CNN – FLC – DSTATCOM to the system for the FFT analysis, the THD_V produce excellent result with 1.14% harmonics which is within the provision made by IEEE Std. 1159 - 2014.

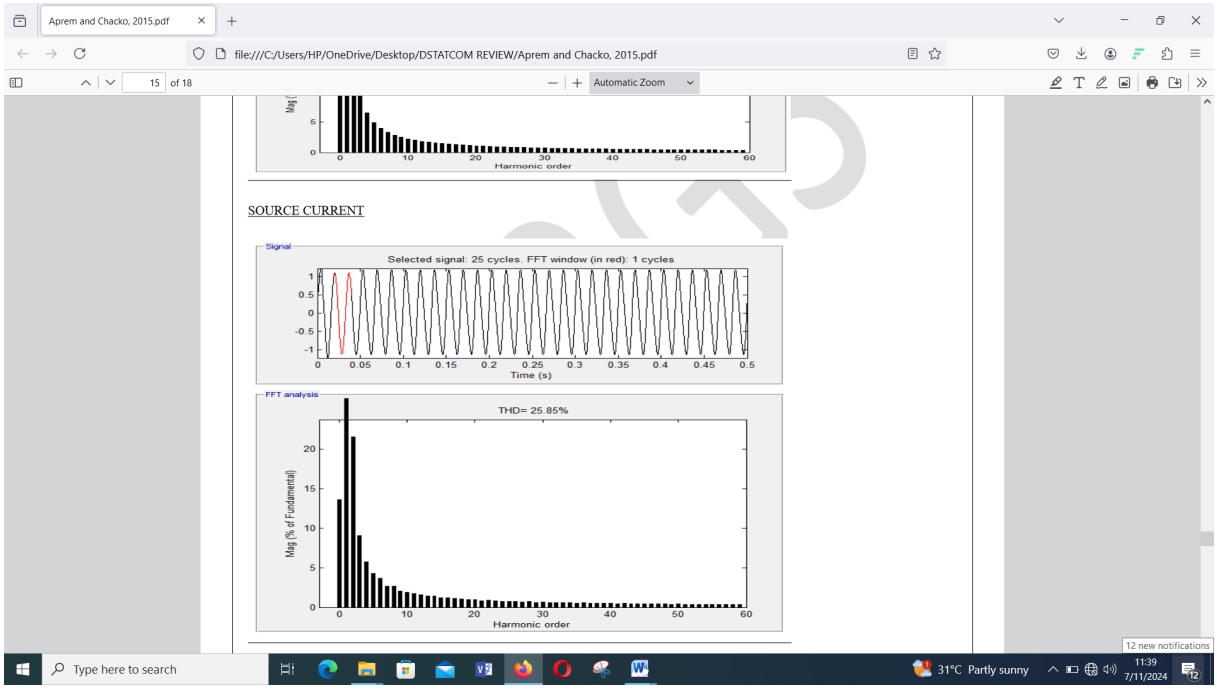

Figure 11. FFT analysis of the model without the DSTATCOM.

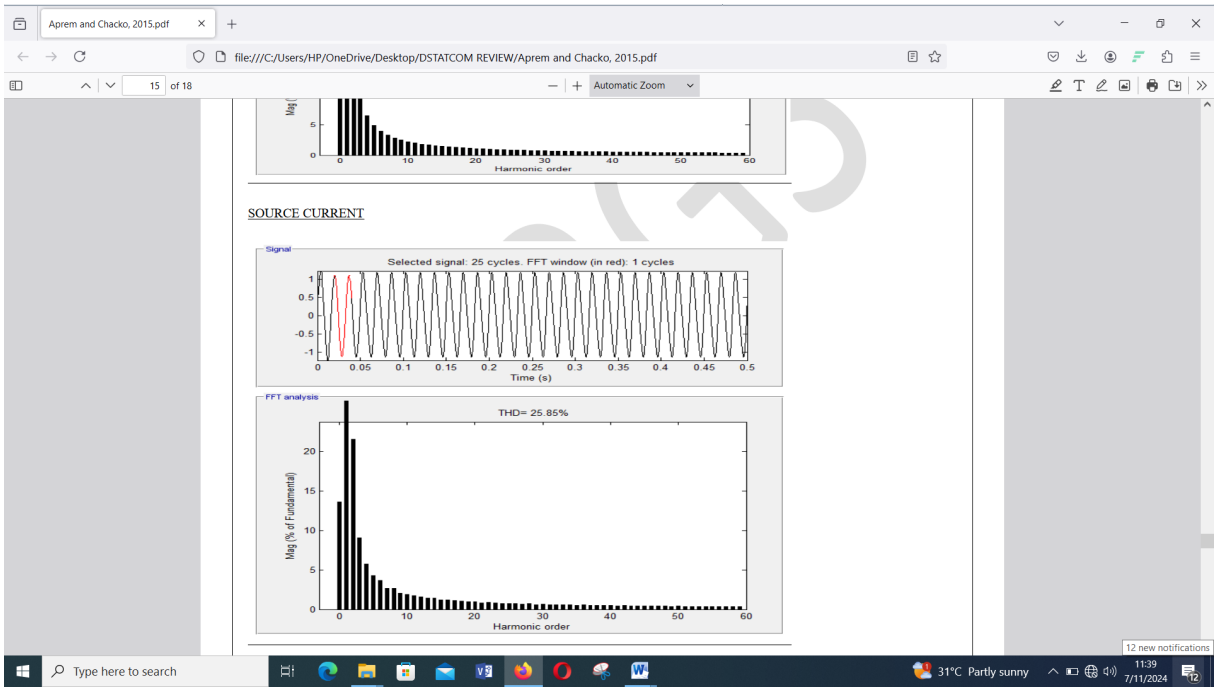

Figure 12. THD of the model without the DSTATCOM.

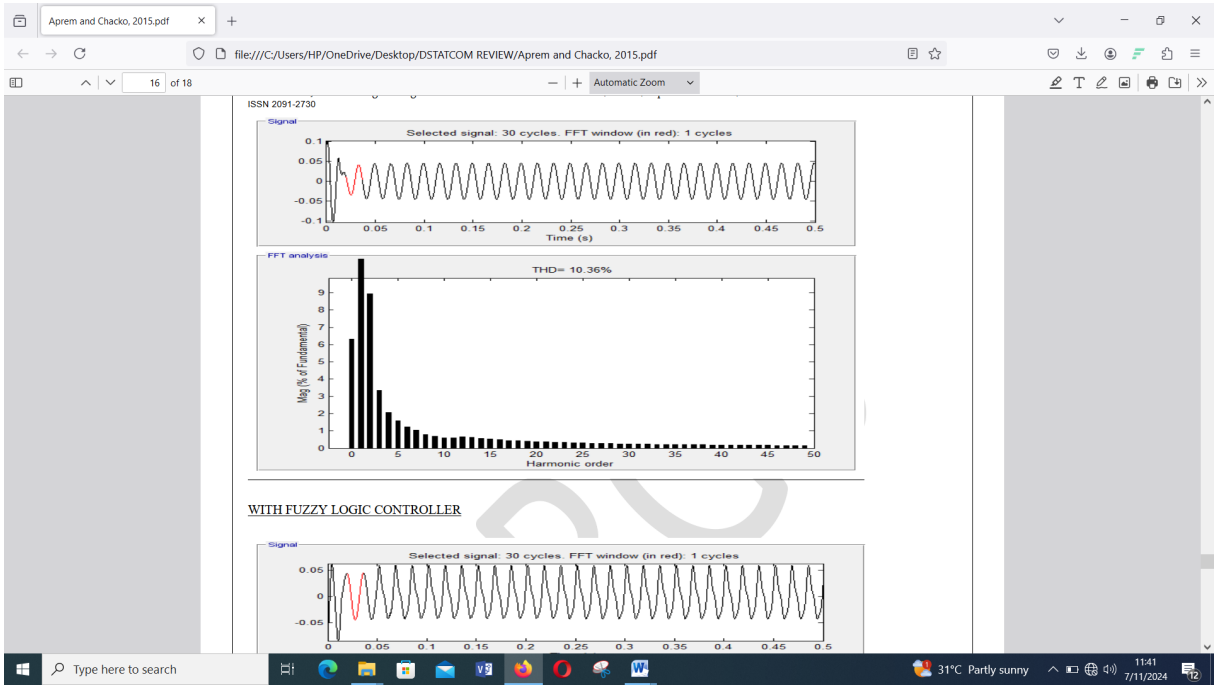

Figure 13. FFT analysis of the model with the DSTATCOM.

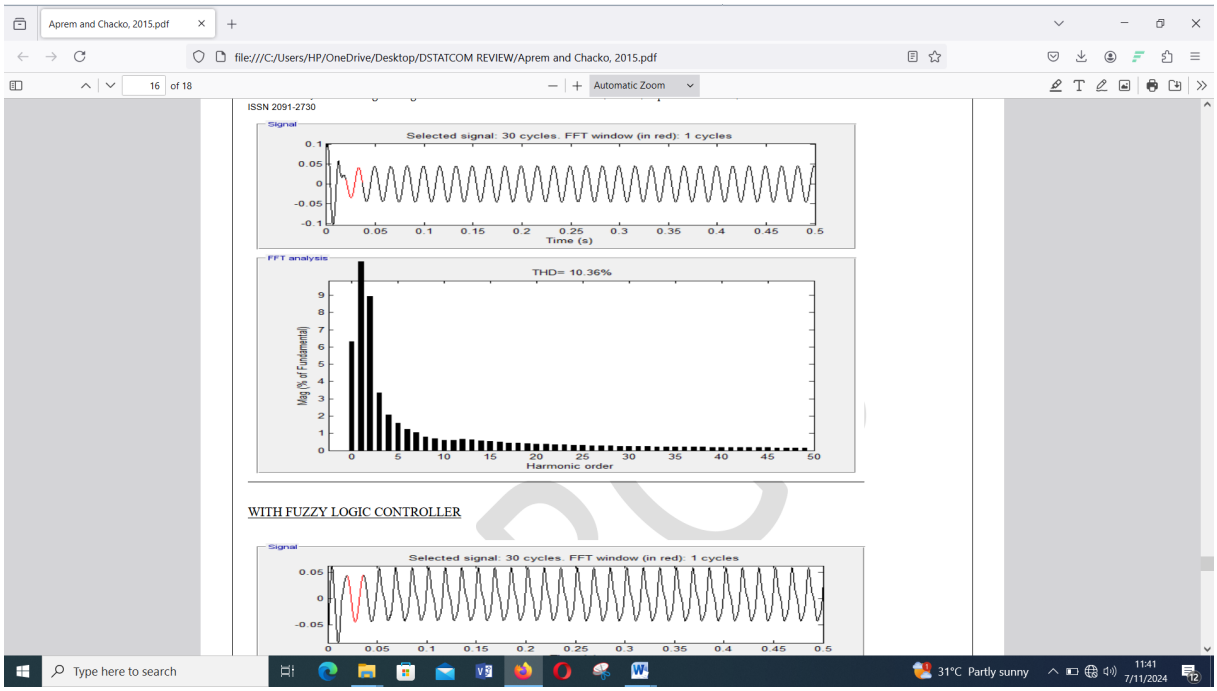

Figure 14. THD of the model with the DSTATCOM.

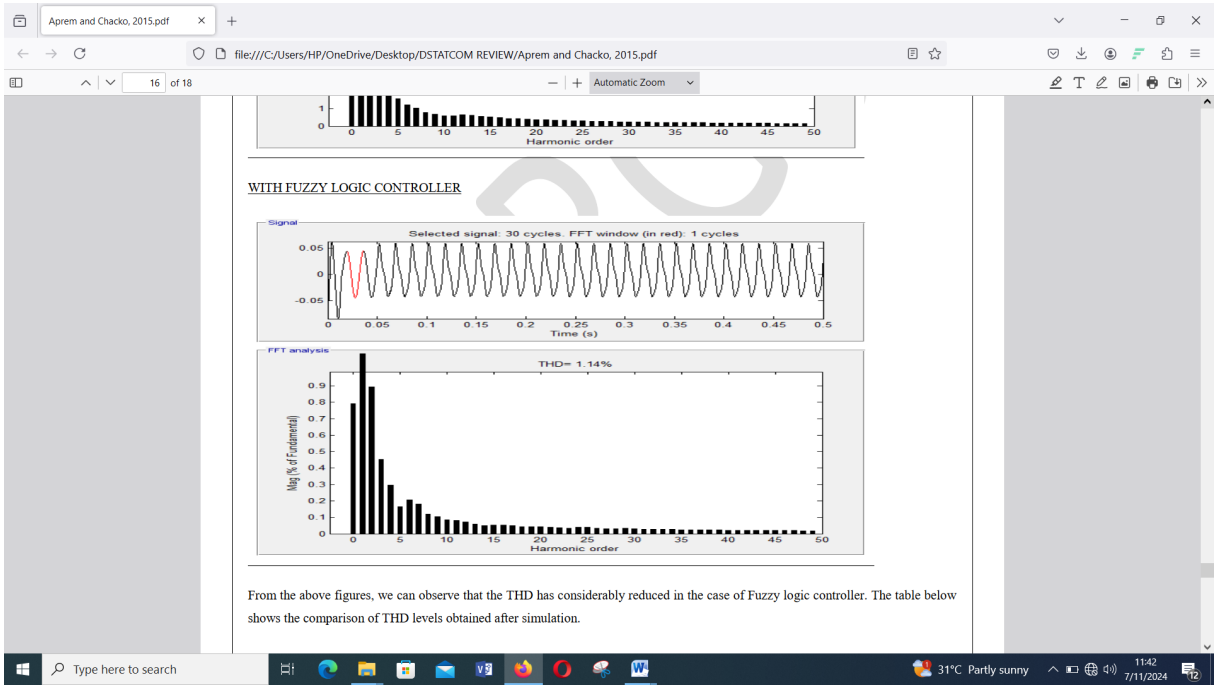

Figure 15. FFT analysis with the CNN-FLC-DSTATCOM.

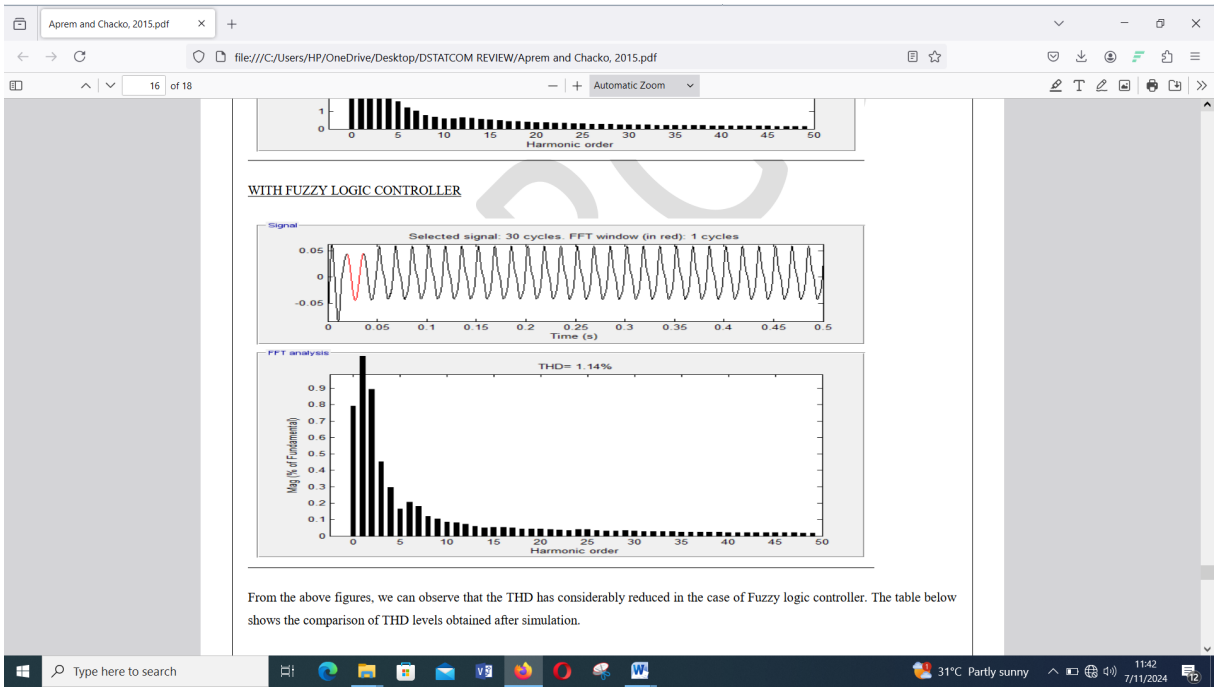

Figure 16. THD of the model with the CNN-FLC-DSTATCOM.

Table 2. Comparison of THD_V analysis for the three conditions.

Conditions	THD_V
Without DSTATCOM	25.85%
With DSTATCOM	10.36%
With CNN – FLC – DSTATCOM	1.14%

Performance operation of total DC – link capacitor voltage's (i.e., V_{dc}) controller regarding VAR productions were illustrated in Figure 17. Figure 18 portrayed AC output voltage generated from DSTATCOM output voltage Vc. The reactive current Icq injected by the reactive current reference control algorithm based fuzzy logic controller during sag condition is also depicted in Figure 18. Current surge produced in solving abnormality restored the system to normal operations.

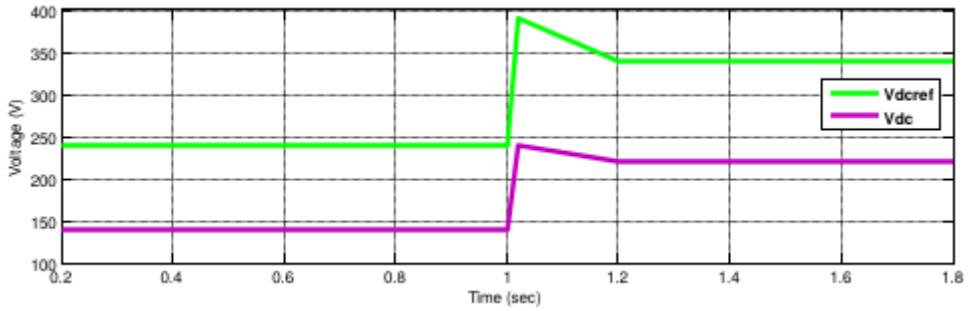

Figure 17. DC link voltages at different loading conditions.

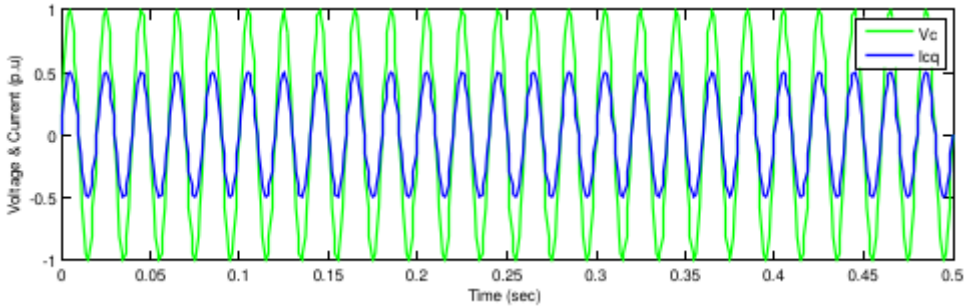

Figure 18. DSTATCOM output voltage V_c and injected reactive current I_{cq} at the point of common coupling.

The performance comparison of the three controllers is indicated in Figure 19. The figure shows the reactive power compensation response for the three controllers after the incorporation of reactive current reference control algorithm. The PI controller is described with slow rise to steady state response and noticeable oscillations before settling around 0.1 to 0.2 second while the conventional FLC exhibits faster response than the PI controller with small oscillations at the beginning. This controller settles between 0.05 to 0.1 second. The proposed CNN – FLC method is characterized with fastest response and smoother curve without overshoot or oscillation settling within 0.03 to 0.07 second. This portrays the efficiency of the approach in mitigating power quality problems. Table 3 also confirmed this performance capability.

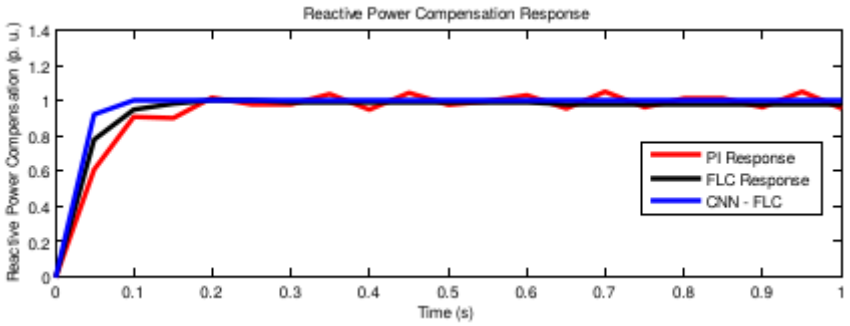

Figure 19. Reactive power compensation response of the controllers.

Table 3. Performance comparison of the proposed approach with other methods.

Approach	THD Reduction	Response Time	Robustness	Adaptability
PI	Medium	Slow	Low	Poor
FLC	Good	Faster	High	Good
CNN – FLC	Excellent	Fastest	Very High	Excellent

5 Conclusion

A convolutional neural network (CNN) based fuzzy logic control (FLC) incorporating reactive current reference control algorithm applicable for DSTATCOM operation was proposed. The efficiency of method was investigated via simulation studies that have shown its capability in achieving good response, reliability and transient response for VAR compensation and power factor correction under different loading conditions. Pulse width modulation technique was used to balance DC – link capacitor voltages and therefore equalizes current stress via switching devices. Fortunately enough, the algorithm is capable of minimizing effect of inherent PLL delay which normally causes DSTATCOM

to exhibit large oscillations. DSTATCOM current i_{cq} is very close to current reference values and showed reasonably smooth profile when algorithm is incorporated into the system, thereby reducing effect of voltage instability and enhances overall system performance. The approach had been proved to have faster response and shorter settling time at almost zero overshoot when compared with other approaches. Remarkable record of THD_V minimization of 1.14% has been achieved which indicates the approach suitability and superiority in mitigation PQ problems. Main contribution of work is the incorporation of CNN adaptive FLC DSTATCOM to improve PQ and lower THD in power distribution system. The approach is superior when compared to PI controllers in terms of faster response, better adaptability, lower THD, improved stability, better handling of nonlinear loads as well as system uncertainties. The approach can be improved using real – time hardware testing, IoT – based monitoring, FPGA implementation and hybrid deep learning controllers as part of future work.

References

[1] Abdelsalam, A. A., Ghoneim, S. S. M. and Salem, A. A. (2022). "An efficient compensation of modified DSTATCOM for improving microgrid operation". Alexandria Eng. J., vol. 61, no. 7, pp. 5501–5516. doi:10.1016/j.aej.2021.10.061.

[2] Alhattab, A. S., Alsammak, A. N. and Mohammed, H. A. (2023). "A Review on D-STATCOM for Power Quality Enhancement." Al-Rafidain Engineering Journal (AREJ) Vol.28, No.1, pp. 207-218.

[3] Ali, A., Eltayeb, E. B. M., & Bakhit, R. M. (2017). "Design and Simulation of Fuzzy Logic Controller for DSTATCOM in Power Design and Simulation of Fuzzy Logic Controller for DSTATCOM in Power System". University of Khartoum Engineering Journal (UofKEJ) Vol. 6, Issue 2, pp. 7-13.

[4] Aprem, A. A., & Chacko, F. M. (2015). Fuzzy Controlled DSTATCOM for Harmonic Compensation. International Journal of Innovative Research in Technology (IJIRT), Volume 2 Issue 5, pp. 106–113.

[5] Gadhawe, R., & Kasulkar, P. (2021). Performance control of DSTATCOM by P-Q theory with Power factor correction of Polluted Grid. IJARIIE, Vol-7 Issue-4, pp. 1749–1756.

[6] Gajjar, N. A., & Zaveri, T. N. (2018). A Review of DSTATCOM Used in Solar Photovoltaic System. *2018 International Conference and Utility Exhibition on Green Energy for Sustainable Development (ICUE)*, October, pp. 1–7.

[7] Hossain, E., Tur, M. R., Sanjeevankumar, P., Selin, A. Y., & Imtiaz, K. (2018). Analysis and Mitigation of Power Quality Issues in Distributed Generation Systems using custom power devies. *IEEE Access*.

[8] Juan, S., Amin, N., Akhtar, K. and Peng, S. (2015). Fuzzy logic control of DSTATCOM for improving power quality and dynamic performance. *IEEE*.

[9] Jyothi, K. R. S., Kumar, P. V., & Jayakumar, J. (2021). A Review of Different Configurations and Control Techniques for DSTATCOM in the Distribution system. E3S Web of Conferences 309, 01119, pp. 1–12. https://doi.org/10.1051/e3sconf/202130901119

[10] Kantar, E. and Tedeschi,E. (2020). "Load Compensation by DSTATCOM with LCL-Filter by Comparing Different Resonance Damping Methods," In 2020 15th Int. *Conf*. Ecol. Veh. Renew. Energies, EVER 2020. doi:10.1109/EVER48776.2020.9243010.

[11] Khan, B., Redae, ., Gidey, E., Mahela, O. P., Taha, I. M. B. and Hussien, M. G. (2022). "Optimal integration of DSTATCOM using improved bacterial search algorithm for distribution network optimization". Alexandria Eng. J., vol. 61, no. 7, pp.5539–5555. doi: 10.1016/j.aej.2021.11.012.

[12] Law, K. H., Dahidah, M. S. A. and Almurib, H. A. F. (2014). "A new reactive current reference algorithm for STATCOM system based on cascaded multilevel inverters", IEEE Transaction on Power Electronics, DOI:10.1109/TPEL.2014.2341318

[13] Pandiaraj, R. & Rani, H. R. (2020). Enhancement of Power Quality Using Fuzzy Logic Controlled DSTATCOM. Int. J.Adv.Sig.Img.Sci, Vol. 6, No.1, pp. 21–28.

[14] Rohouma, W., Balog, R. S., Peerzada, A. A., & Begovic, M. M. (2020). D-STATCOM for harmonic mitigation in low voltage distribution network with high penetration of nonlinear loads. *Renewable Energy*, 145, 1449–1464. https://doi.org/10.1016/j.renene.2019.05.134

[15] Sagar, S., & Satti, R. (2018). Fuzzy Logic Control of D-STATCOM for Improving Power Quality and Dynamic Performance. International Journal of Innovative Technologies (IJITECH), Vol. 6, Issue. 02, pp. 487–490.

[16] Sandeep, D. P. T., Venkata, K. B., & Sankar, K. S. G. (2013). Fuzzy Logic Control of D-Statcom for Power Quality Improvement. Int. Journal of Engineering Research and Applications, Vol. 3, Issue 6, pp. 398–403.

[17] Shi, J., Noshadi, A., Kalam, A., & Shi, P. (2015). Fuzzy Logic Control of DSTATCOM for Improving Power Quality and Dynamic Performance. IEEE, pp. 2–7.

[18] Singh, P. K. (2018). Analysis Modelling & Simulation of VSC based D-Statcom for Reactive VAR Compensation. *2018 International Conference on Current Trends towards Converging Technologies (ICCTCT)*, 1–6.

[19] Tundwal, P., & Joshi, R. R. (2021). Fuzzy Logic Controller based D- STATCOM for Power Quality Solution in Distributed Generated System. International Journal of Technical Research & Science, Volume VI Issue VII, pp. 1–6.

[20] Ullah M. F. and Hanif, A. (2021). "Power quality improvement in distribution system using distribution static compensator with super twisting sliding mode control". Int. Trans. Electr. Energy Syst., vol. 31, no. 9, pp. 1–32. doi:10.1002/2050-7038.12997.